## FLANGED PANCAKE SEAL
## (PFW)

| | PIPE SIZE | CLASS | FLANGE DIAMETER "A" | FLANGE THICKNESS "B" | BOLT HOLE DIAMETER "C" | BOLT CIRCLE "D" | # OF BOLTS | STANDARD DIAPHRAGM DIAMETER "F" |
|---|---|---|---|---|---|---|---|---|
| ASME B16.5 | 2" | 150# | 6.00 (152) | 0.69 (18) | 0.75 (19) | 4.75 (121) | 4 | 2.30 (58) |
| | | 300# | 6.50 (165) | 0.81 (21) | 0.75 (19) | 5.00 (127) | 8 | 2.30 (58) |
| | | 600# | 6.50 (165) | 1.00 (25) | 0.75 (19) | 5.00 (127) | 8 | 2.30 (58) |
| | | 900/1500# | 8.50 (216) | 1.50 (38) | 1.00 (25) | 6.50 (165) | 8 | 2.30 (58) |
| | | 2500# | 9.25 (235) | 2.00 (51) | 1.13 (29) | 6.75 (172) | 8 | 2.30 (58) |
| | 3" | 150# | 7.50 (191) | 0.88 (22) | 0.75 (19) | 6.00 (152) | 4 | 3.50 (89) |
| | | 300# | 8.25 (210) | 1.06 (27) | 0.88 (22) | 6.62 (168) | 8 | 3.50 (89) |
| | | 600# | 8.25 (210) | 1.25 (32) | 0.88 (22) | 6.62 (168) | 8 | 3.50 (89) |
| | | 900# | 10.50 (267) | 1.50[38] | 1.25 (32) | 8.00 (203) | 8 | 3.50 (89) |
| | | 1500# | 10.50 (267) | 1.88 (48) | 1.25 (32) | 8.00 (203) | 8 | 3.50 (89) |
| | | 2500# | 12.00 (305) | 2.62 (67) | 1.38 (35) | 9.00 (229) | 8 | 3.50 (89) |
| EN1092-1 | | | | | | | | |
| | DN 50 | PN40 | 6.50 (165) | 0.67 (17) | 0.79 (20) | 4.92 (125) | 4 | 2.30 (58) |
| | | PN63 | 7.09 (180) | 0.91 (23) | 1.02 (26) | 5.31 (135) | 4 | 2.30 (58) |
| | | PN100 | 7.68 (195) | 0.98 (25) | 1.10 (28) | 5.71 (145) | 4 | 2.30 (58) |
| | DN 80 | PN40 | 7.87 (200) | 0.83 (21) | 0.79 (20) | 6.30 (160) | 8 | 3.50 (89) |
| | | PN63 | 8.46 (215) | 0.98 (25) | 1.02 (26) | 6.69 (170) | 8 | 3.50 (89) |
| | | PN100 | 9.06 (230) | 0.98 (25) | 1.10 (28) | 7.09 (180) | 8 | 3.50 (89) |

| | PIPE SIZE | CLASS | DIAMETER "G" | INNER DIAMETER "K" | BEVELED DIAMETER "L" | THICKNESS WITH 1/4-NPT F.C. "M" | THICKNESS WITH 1/2-NPT F.C. "M" | MINIMUM GASKET I.D. "N" |
|---|---|---|---|---|---|---|---|---|
| ASME B16.5 | | | | | | | | |
| | 2" | 150# | 3.62 (92) | 2.12 (54) | 2.48 (63) | 0.97 (25) | 1.30 (33) | 2.50 (64) |
| | | 300# | 3.62 (92) | 2.12 (54) | 2.48 (63) | 0.97 (25) | 1.30 (33) | 2.50 (64) |
| | | 600# | 3.62 (92) | 2.12 (54) | 2.48 (63) | 0.97 (25) | 1.30 (33) | 2.50 (64) |
| | | 900/1500# | 3.62 (92) | 2.12 (54) | - | 0.97 (25) | 1.30 (33) | 2.50 (64) |
| | | 250# | 3.62 (92) | 2.12 (54) | - | 0.97 (25) | 1.30 (33) | 2.50 (64) |
| | 3" | 150# | 5.00 (127) | 3.60 (91) | - | 0.97 (25) | 1.30 (33) | 3.70(94) |
| | | 300# | 5.00 (127) | 3.60 (91) | - | 0.97 (25) | 1.30 (33) | 3.70(94) |
| | | 600# | 5.00 (127) | 3.60 (91) | - | 0.97 (25) | 1.30 (33) | 3.70(94) |
| | | 900# | 5.00 (127) | 3.60 (91) | - | 0.97 (25) | 1.30 (33) | 3.70(94) |
| | | 1500# | 5.00 (127) | 3.60 (91) | - | 0.97 (25) | 1.30 (33) | 3.70(94) |
| | | 2500# | 5.00 (127) | 3.60 (91) | - | 0.97 (25) | 1.30 (33) | 3.70(94) |
| EN1092-1 | | | | | | | | |
| | DN 50 | PN 40 | 4.00 (102) | 2.40 (61) | - | 0.97 (25) | 1.30 (33) | 2.50 (64) |
| | | PN 63 | 4.00 (102) | 2.40 (61) | - | 0.97 (25) | 1.30 (33) | 2.50 (64) |
| | | PN100 | 4.00 (102) | 2.40 (61) | - | 0.97 (25) | 1.30 (33) | 2.50 (64) |
| | DN 80 | PN 40 | 5.43 (138) | 3.60 (91) | - | 0.97 (25) | 1.30 (33) | 3.70(94) |
| | | PN 63 | 5.43 (138) | 3.60 (91) | - | 0.97 (25) | 1.30 (33) | 3.70(94) |
| | | PN 100 | 5.43 (138) | 3.60 (91) | - | 0.97 (25) | 1.30 (33) | 3.70(94) |

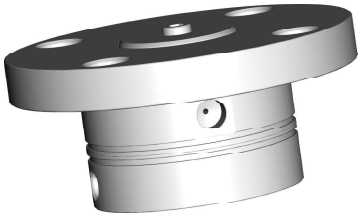

DIMENSIONS IN INCHES (MILLIMETERS)

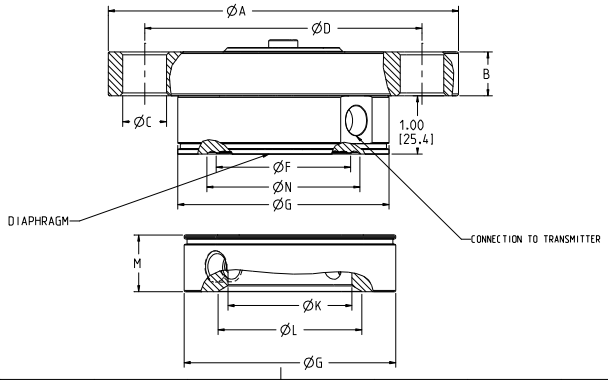


ROSEMOUNT INC. ROSEMOUNT INC OFFERS THESE DRAWINGS AS THESE DRAWINGS ARE ROSEMOUNT ENGINEERING UNIT NOTES. IN INCHES [mm].

REFERENCE ROSEMOUNT PRODUCT DATA SHEETS FOR PRODUCT SPECIFICATIONS.

LANGUAGE

EMERSON.

3RD ANGLE | SIZE D | SCALE NTS

TITLE: ROSEMOUNT 1199 SEALS TYPE I DRAWING

| | | | |
|---|---|---|---|
| DR. J. ARMSTRONG | 3/7/17 | DRAWING NO. | 01199-9500 |
| APP'D L.BRYANT | 3/7/17 | | |
| CAD MAINTAINED, PRO-E | | SHEET 1 OF 1 | A1 |